DATE	CHANGE	ENG

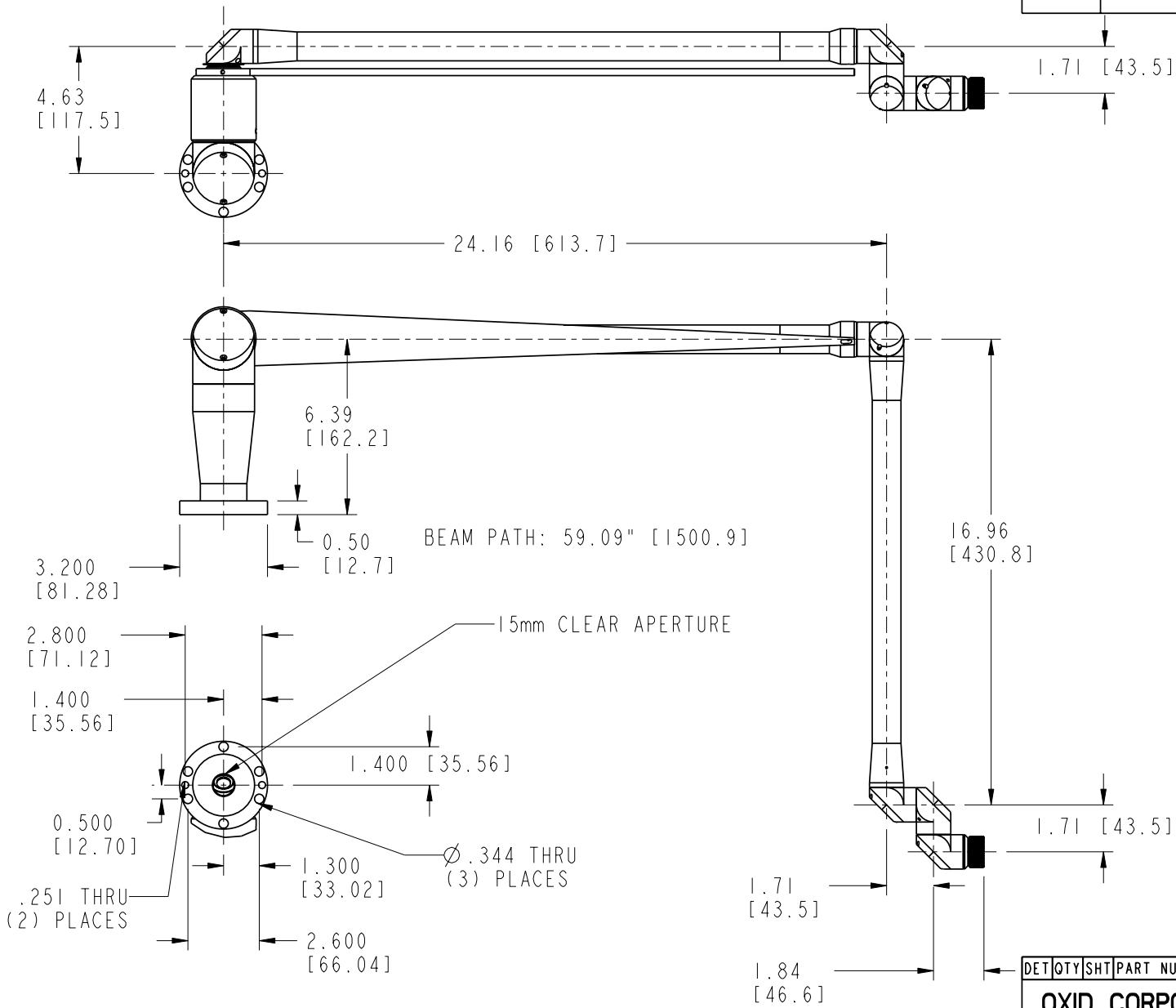

NOTE:
ARM REQUIRES (7) ∅1.0" x .12" THK. MIRRORS.
COATING AND MATERIAL AS SPECIFIED BY USER.
MIRRORS MUST BE PURCHASED SEPERATELY.

DET	QTY	SHT	PART NUMBER	DESCRIPTION

OXID CORPORATION
24730 CRESTVIEW CT.
FARMINGTON HILLS, MI 48335

INFORMATION SHOWN ON THIS PRINT IS PROPRIETARY. THIS DRAWING IS NOT TO BE REPRODUCED EITHER WHOLLY OR IN PART WITHOUT THE EXPRESS PERMISSION OF OXID CORPORATION.

TOLERANCE EXCEPT AS NOTED	TITLE ARTICULATED ARM WEIGHTLESS		DRWN
DECIMAL .XX .XXX .XXXX ±.010 .005 .0005			APPR WGF
	MATERIAL Not Specified		CHKD MJT
ANGULAR ± 30 MIN	REL.-REV.-VER. PROTOTYPE-PRI-2+		
SCALE NONE	DATE 04-Jun-99	DWG. NO. PLATA1010	SHT. 2 OF 2